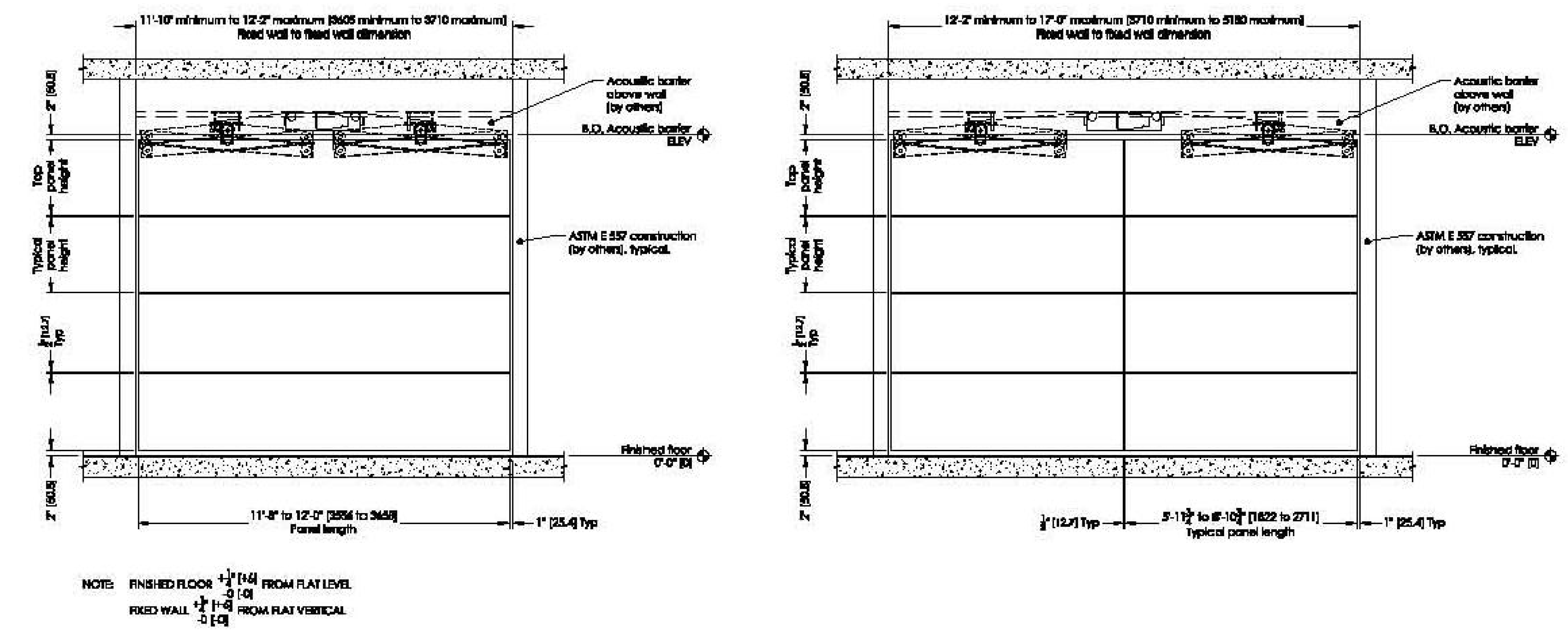

C | ELEVATION - WALL DOWN
R811737 SCALE 3/8" = 1'-0"

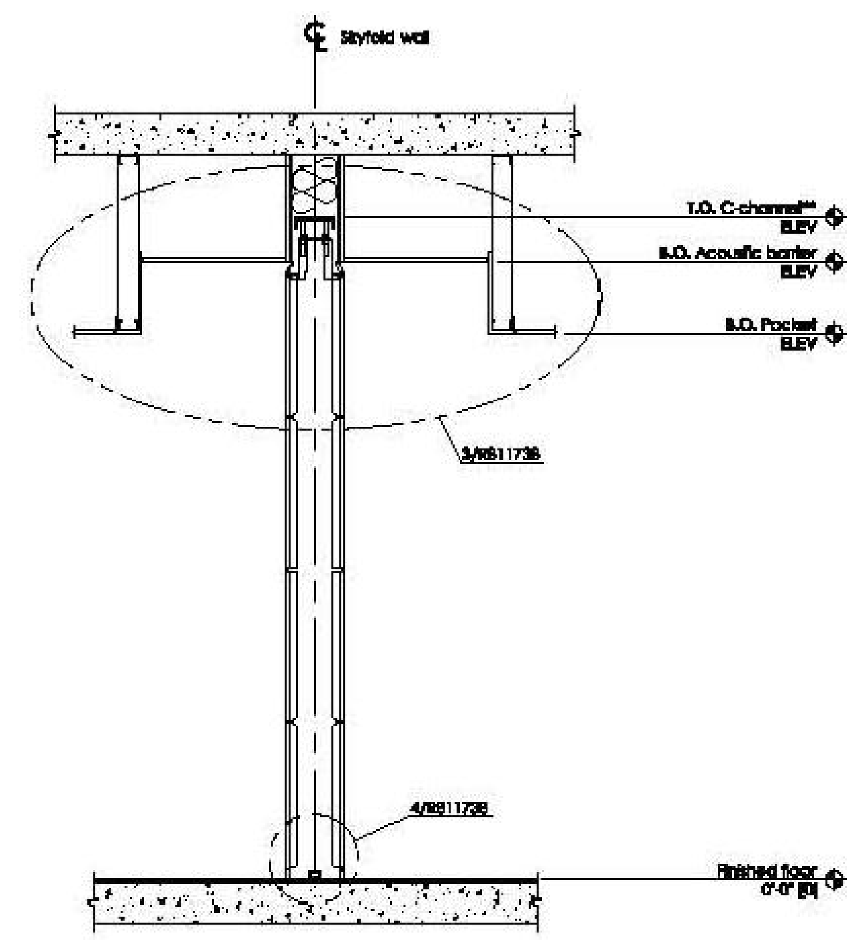

D | SECTION - WALL DOWN
R811737 SCALE 1/2" = 1'-0"

SKYFOLD® classic™

Part of the Raitech Architectural Group

NOTES TO G.C.

1. Give special attention to:
   - Any obstructions to ceiling pockets & cables (i.e. ducts, sprinkler pipes, drain pipes, electrical conduits, etc.).
   - Tolerances of fixed walls & finished floor.
   - Removable ceiling tile for top of pocket.
2. STC rating: 51 (as per ASTM E90).
3. Panel finish: XXXXXXXXXXXXXXXXXXXXXXXXXXXXXXXXXXXXXXXXXXXXXXXXXXXXXXXX.
4. Skyfold requires two 24" x 24" [610 x 610] (minimum) access panels in acoustic ceiling directly beside motor for installation & maintenance of system. Not required if finished ceiling is suspended ceiling tiles.
5. All pocket construction (gypsum, suspended ceiling tile, framing, etc.) is by others.
6. Dimensions in [ ] are in millimeters (mm) unless noted otherwise.

**C-channel designation:

North & South America = C8 x 11.5 [C200 x 17]

Europe = C200 x 75

Asia = C200 x 80

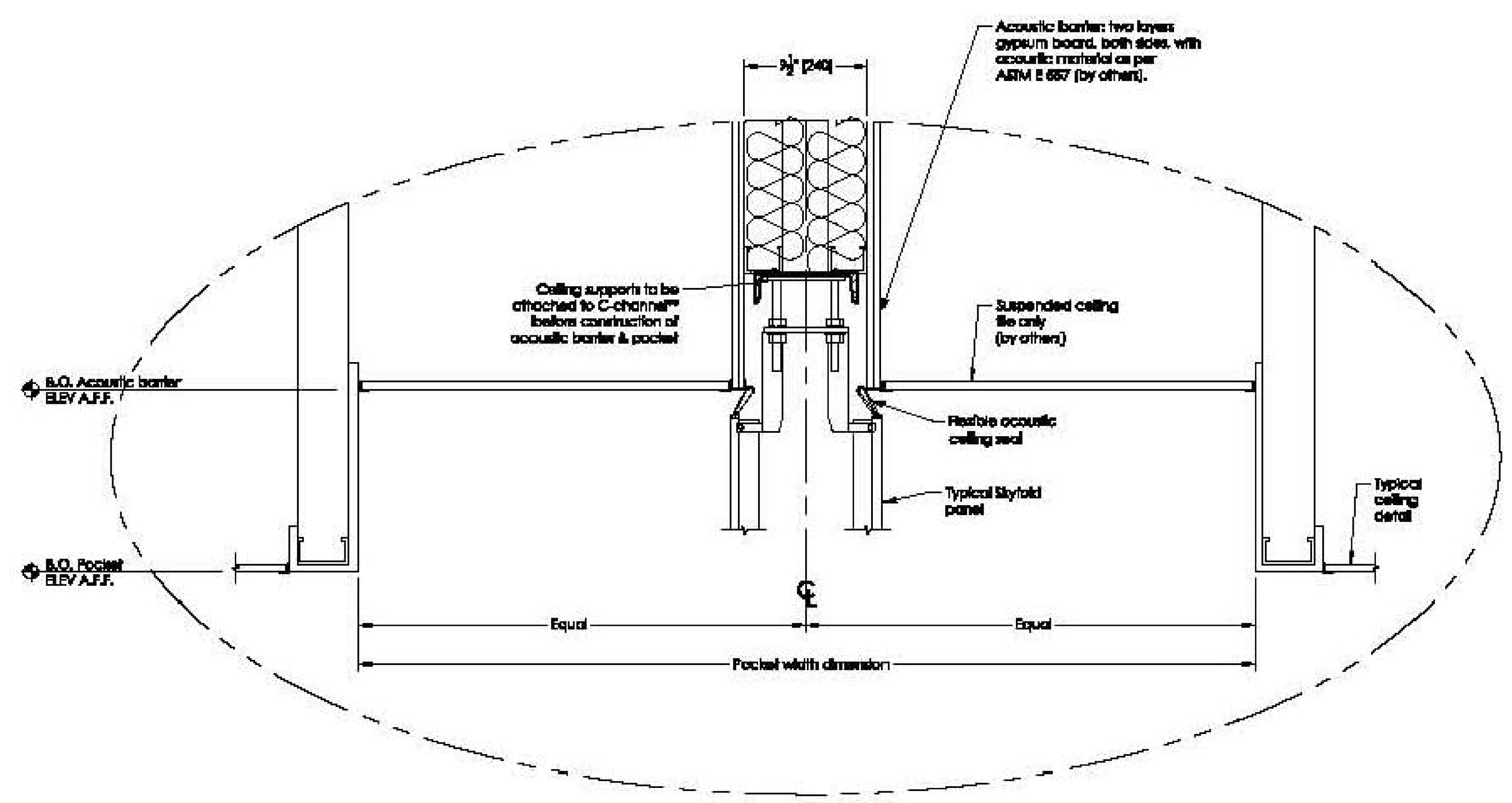

3 | POCKET DETAIL
R811738 SCALE: 1 1/2" = 1'-0"

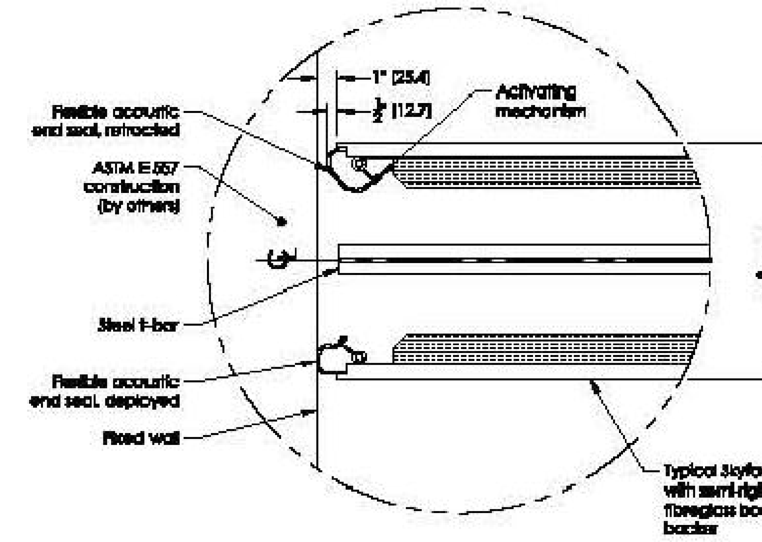

2 | END SEAL DETAIL
R811737 SCALE: 2" = 1'-0"

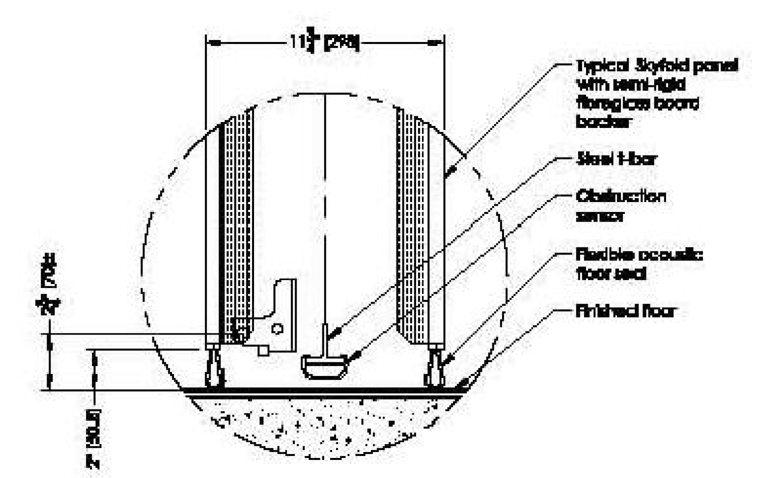

4 | FLOOR SEAL DETAIL
R811738 SCALE: 2" = 1'-0"

NOTE:
SEE DRAWINGS R811626 & R811627 FOR 17'-0" MINIMUM TO 24'-0" MAXIMUM [5180 MINIMUM TO 7315 MAXIMUM] LONG WALL CONDITIONS.

SEE DRAWINGS 51419 & 51420 FOR 24'-0" MINIMUM TO 36'-0" MAXIMUM [7315 MINIMUM TO 10973 MAXIMUM] LONG WALL CONDITIONS.

THIS DRAWING IS INTENDED AS A GUIDE. IN ALL CASES SKYFOLD SHOP DRAWINGS SPECIFIC TO EACH PROJECT ARE REQUIRED FOR FINAL BUILD TO DIMENSIONS.

TYPICAL SKYFOLD WALL

11'-10" min to 17'-0" max
[3605 min to 5180 max]
x 9'-0" max [2745 max] B.O. Pocket
MICRO DRIVE UNIT

PANEL &
POCKET DETAILS

drawn/dessiné	date
approved/approuvé	project number/numéro de projet
revision	drawing number/numéro de dessin
4	R811738

Sheet 2 of 2

No:	Date:	Revision:
01	3-09-11	DWG. UPDATES & TOWNSHIP COMMENTS

Heritage Architecture, LLC
Architecture Design Interiors
352 Evelyn St., Suite 2
Paramus, N.J. 07652
Tel : (201) 262 3800
Fax : (201) 262 3802

Project No: 0919
Date: OCT 11, 2010
Drawn By:
Checked By:
Scale: As Noted
Lot: 10 & 11
Block: 4402

Project: HOUSE OF WORSHIP (MOSQUE) TWO STORY ADDITION
Client: DAR - UL ISLAH
Drawing title: SKYFOLD PARTITION DETAILS

Seal: Nassir Almukhtar, RA NJ Lic. # 16036

Drawing No: A-221

© Heritage Architecture, LLC

01 SKYFOLD DETAILS
SCALE: N.T.S.

NOTES:
–DWG'S. PROVIDED BY MANUFACTURER