EMBEDMENT AND SPLICE LENGTH SCHEDULE

N.T.S.

fy = 60000 psi   f'c = 4000 psi cylinder strength

BAR SIZE db	COMPRESSION		TENSION EMBEDMENT LENGTH				TENSION LAP SPLICE LENGTH - CLASS B			
	EMBEDMENT LENGTH	LAP SPLICE LENGTH	TOP BARS		OTHER BARS		TOP BARS		OTHER BARS	
			CATEGORY		CATEGORY		CATEGORY		CATEGORY	
			I	II	I	II	I	II	I	II
#3	8	12	19	28	14	21	24	36	19	28
#4	9	15	25	37	19	28	32	48	25	37
#5	12	19	31	46	24	36	40	60	31	46
#6	14	23	37	56	28	43	48	72	37	56
#7	17	26	54	81	42	62	70	105	54	81
#8	19	30	62	93	47	71	80	120	62	93
#9	21	34	70	104	54	80	90	136	70	104
#10	24	38	78	117	60	90	102	153	78	117
#11	27	42	87	130	67	100	113	170	87	130
NOTATION USED ON DRAWING	• LCE	• LCS	• LTE				• LTS			

fy = 60000 psi   f'c = 5000 psi cylinder strength

BAR SIZE db	COMPRESSION		TENSION EMBEDMENT LENGTH				TENSION LAP SPLICE LENGTH - CLASS B			
	EMBEDMENT LENGTH	LAP SPLICE LENGTH	TOP BARS		OTHER BARS		TOP BARS		OTHER BARS	
			CATEGORY		CATEGORY		CATEGORY		CATEGORY	
			I	II	I	II	I	II	I	II
#3	8	12	17	25	13	19	22	32	17	25
#4	9	15	22	33	17	25	29	43	22	33
#5	11	19	28	41	21	32	36	54	28	41
#6	14	23	33	50	25	38	43	65	33	50
#7	16	26	48	72	37	56	63	94	48	72
#8	18	30	55	83	42	64	72	108	55	83
#9	20	34	62	93	48	72	61	121	82	93
#10	23	38	70	105	54	81	91	137	70	105
#11	25	42	78	117	60	90	101	152	78	117
NOTATION USED ON DRAWING	• LCE	• LCS	• LTE				• LTS			

NOTES: FOR EMBEDMENT & SPLICE SCHEDULE

1) THIS SCHEDULES APPLY FOR NORMAL WEIGHT CONCRETE. (W=150 PSF)

2) THE CATEGORY OF THE REINFORCEMENT FOR DETERMINING THE EMBEDMENT & SPLICE LENGTHS SHALL BE OBTAINED FROM THE FOLLOWING TABLE: db = BAR DIAMETER)

CATEGORY	CLEAR COVER	CLEAR SPACING	REMARKS
I	⩾ db	⩾ db	BEAM STIRRUPS OR COLUMN TIES THROUGHOUT DEVELOPMENT LENGTH >= CODE MINIMUM.
I	⩾ db	⩾ 2 db	
II	OTHER CASES		

3) TENSION LAP SPLICE LENGTH CATEGORIES I, II ARE BASED ON ACI CLASS B CONDITIONS. LESSER LENGTHS MAY BE ACCEPTABLE, BUT ONLY IF HALF OR LESS OF THE BARS ARE SPLICED AT A POINT AND REINFORCEMENT AREA IS AT LEAST TWICE THAT REQUIRED BY ANALYSIS. CONTRACTOR CAN REQUEST SUCH REDUCTION BY INDICATING THE FOLLOWING. BY INDICATING THE FOLLOWING:

A) WHERE THE SIZE AND NUMBER OF TIES OR SPIRALS PERMITS THE REDUCTION OF LAP LENGTH, THOSE BARS SHALL BE INDICATED ON THE DETAILS.

B) WHERE COMPUTED STRESS VALUES PERMIT THE REDUCTION OD LAP LENGTH. COMPUTATIONS SHALL BE SUBMITTED FOR REVIEW.

C) THE APPLICABLE SECTION OF THE ACI-99 CODE, PERMITTING THE LESSER SPLICE LENGTH, SHALL BE INDICATED ON THE SUBMITTED MATERIAL.

4) WHERE BARS OF DIFFERENT SIZE ARE TO BE SPLICED, THE SPLICE LENGTH FOR ALL ALL BARS SHALL BE THAT REQUIRED FOR THE LARGEST BAR.

5) USE TENSION LAP SPLICE LENGTH (LTS) AT ALL SPLICE LOCATIONS NOT SPECIFICALLY DETAILED UNLESS INDICATED OTHERWISE ON PLANS OR DETAILS.

6) TOP BARS ARE HORIZONTAL BARS PLACED SUCH THAT MORE THAN 12" OF FRESH CONCRETE IS CAST IN THE MEMBER BELOW THE BAR.

7) WHEN REINFORCING BARS ARE EPOXY-COATED, THE VALUES FOR TENSION EMBEDMENT AND LAP SPLICE LENGTHS FOR TOP BARS SHALL BE INCREASED BY 30% AND THE VALUES FOR THE OTHER BARS SHALL BE INCREASED BY 50%.

8) FOR BUNDLED BARS INCREASE EMBEDMENT & SPLICE LENGTHS BY 20% FOR 3-BAR BUNDLE AND BY 33% FOR 4-BAR BUNDLE. IN DETERMINING THE CATEGORY OF BUNDLE REINF., TREAT THE BUNDLE AS A SINGLE BAR WITH A DIAMETER DERIVED FROM THE EQUIVALENT TOTAL AREA.

9) FOR TENSION SPLICING OF #14 BARS USE MECHANICAL COUPLERS. MECHANICAL COUPLERS MUST DEVELOP A MIN OF 125% OF SPECIFIED YIELD STRENGTH (fy) OF BAR.

10) SPLICE LENGTHS SHALL BE DIMENSIONED AT ALL LOCATIONS ON ALL SHOP DRAWINGS.

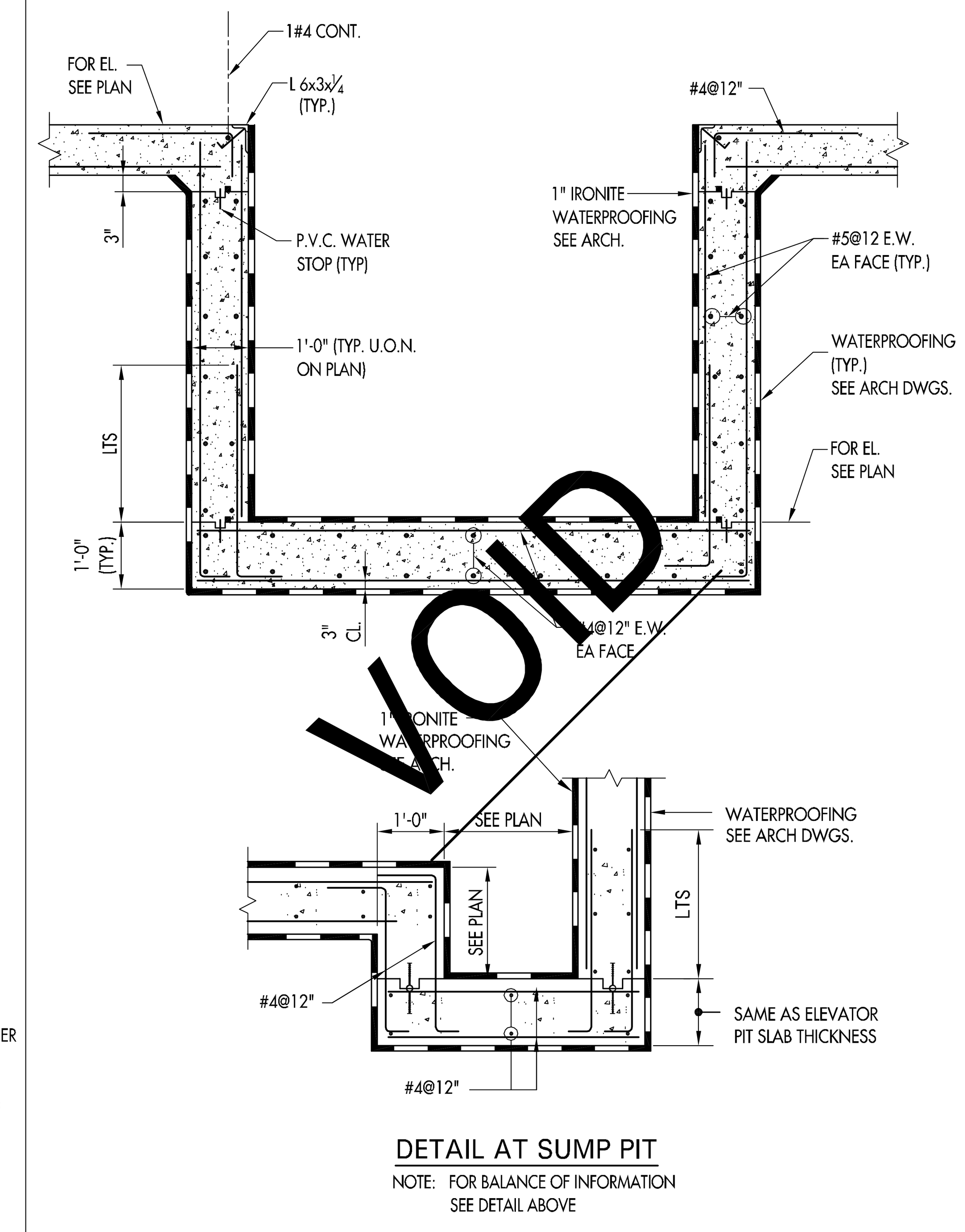

TYPICAL ELEVATOR PIT DETAIL

N.T.S.

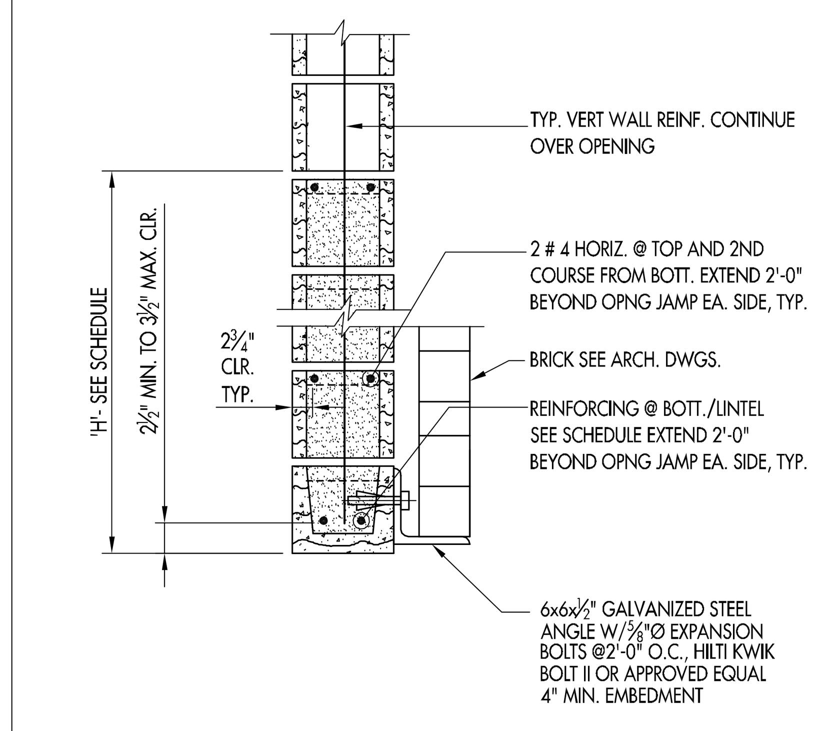

CMU LINTEL SCHEDULE

CMU OPENING WIDTH	'H'	BOTTOM REINFORCEMENT
UP TO 4'-0"	0'-8"	2 # 4
4'-1" TO 7'-0"	0'-16"	2 # 5

TYPICAL REBAR LINTEL DETAIL FOR CMU WALL

N.T.S.

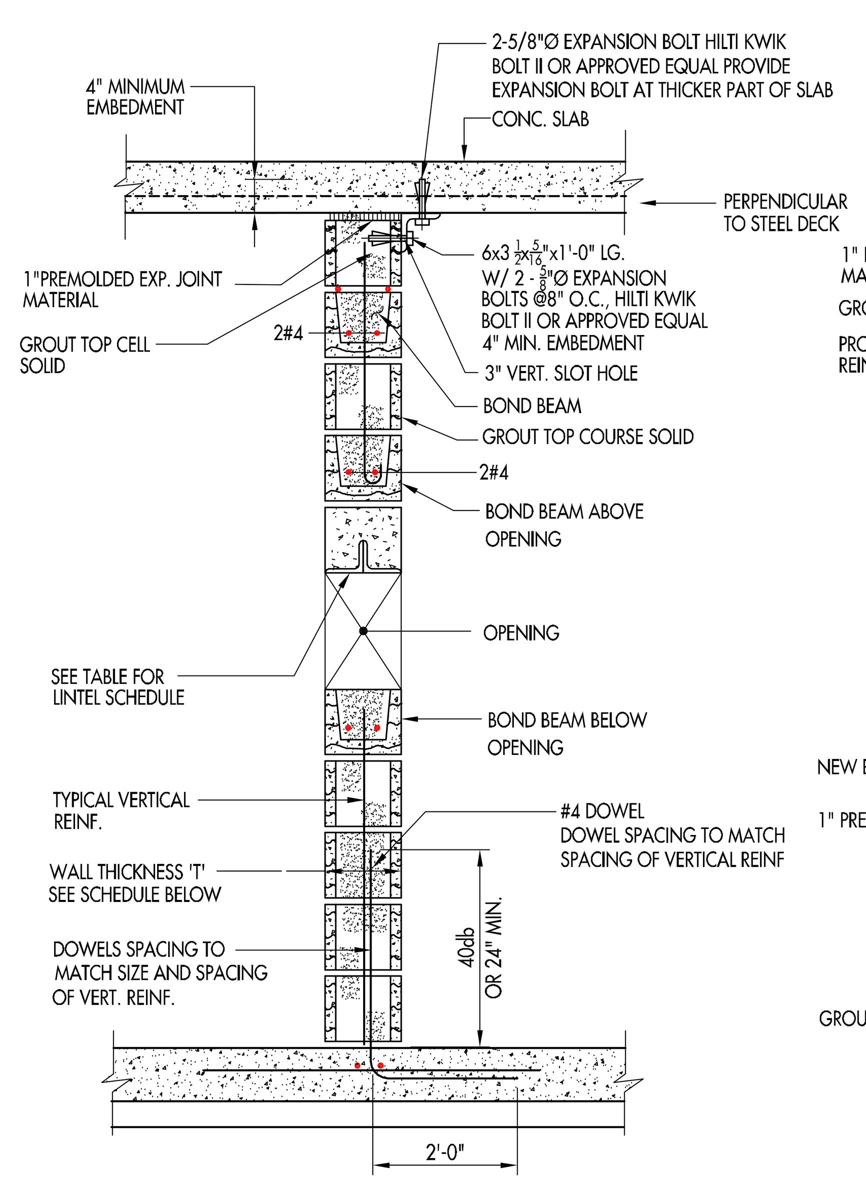

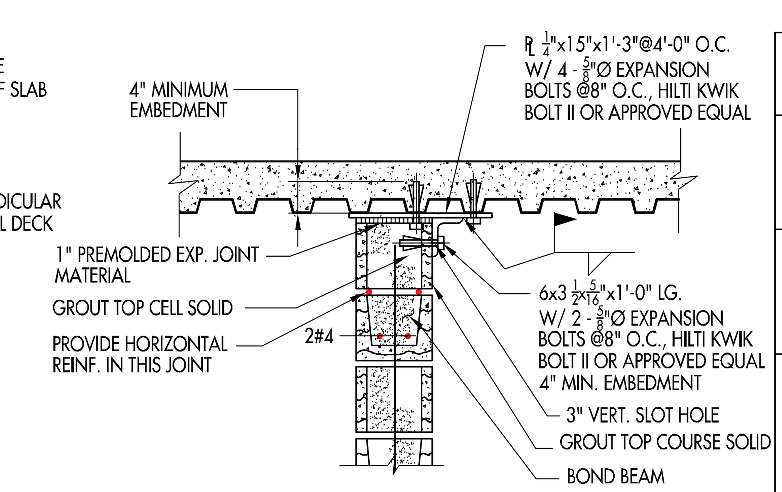

PARALLEL TO STEEL DECK

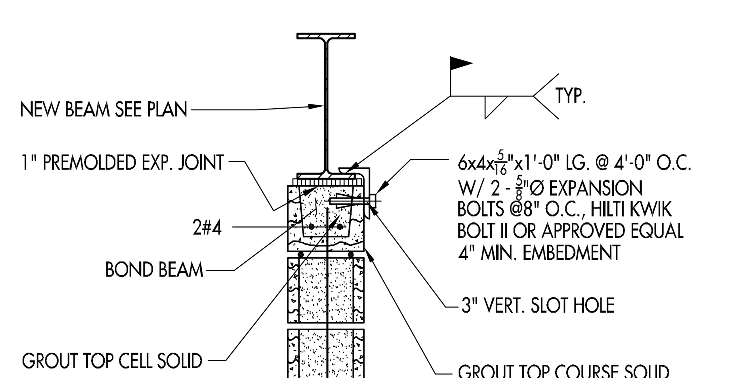

STEEL LINTEL SCHEDULE FOR CMU WALL

WALL THICKNESS t	MAX. SPAN W	LINTEL
8"	UP TO 4'	2 JL 3 1/2 x 3 1/2 x 1/4"
	4' TO 6'	2 JL 3 1/2 x 3 1/2 x 5/16"
	6' TO 8'	2 JL 5 x 3 1/2 x 5/8" LONG LEG VERT.
10"	UP TO 4'	2 JL 4 x 4 x 1/4"
	4' TO 6'	2 JL 4 x 4 x 5/16"
	6' TO 8'	2 JL 6 x 4 x 3/8" LONG LEG VERT.
	8' TO 10'	2 JL 6 x 4 x 1/2" LONG LEG VERT.
12"	UP TO 4'	2 JL 5 x 3 1/2 x 5/16" LONG LEG HORIZ.
	4' TO 6'	2 JL 5 x 5 x 5/16"
	6' TO 8'	2 JL 5 x 5 x 3/8"
	8' TO 10'	2 JL 5 x 5 x 1/2"

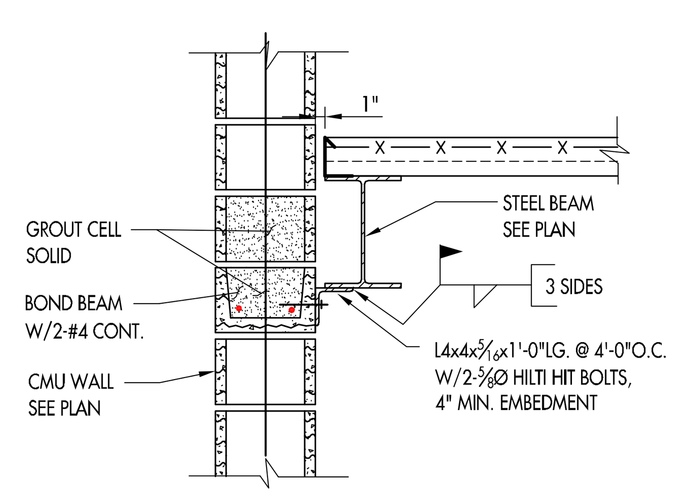

TYPICAL MASONRY WALL DETAIL

N.T.S.

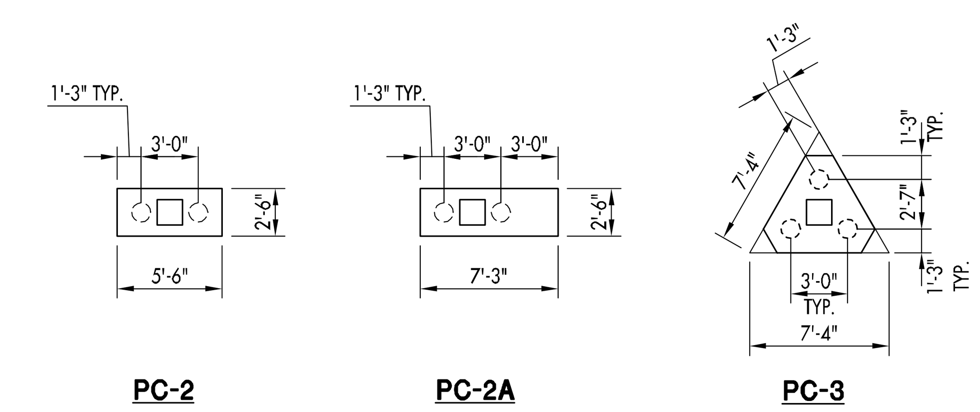

PILE CAP SCHEDULE
(30 TON PILE)

MARK	NUMBER OF PILES	DEPTH (INCHES)	BOTT. REINF. LONG BARS	BOTT. REINF. SHORT BARS	TOP REINF. LONG BARS	TOP REINF. SHORT BARS	REMARKS
PC - 2	2	30	7 - #5	5 - #4			
PC - 3	3	30	5 - #5	THREE WAYS			

NOTES:

1. CENTER OF PILE CAP IS CENTER OF COLUMN UNLESS OTHERWISE NOTED.
2. LONG BARS ARE PLACED IN LOWEST LAYER.
3. CONC. STRENGTH OF PILE CAP, f'c, TO BE 4000 PSI U.O.N.

PILE CAP DETAILS AND SCHEDULE

N.T.S.

No:	Date:	Revision:
	07/21/2010	FOR FOUNDATION PERMIT
	08/20/2010	FOR FOUNDATION BID
	10/14/2010	ISSUED
	11/03/2010	ISSUED
	12/10/2010	ISSUED
	12/20/2010	ISSUED

ADG
NY 212.288.7120
NJ 973.242.2626
Fax 973.242.2676
744 Broad Street
14th Floor
Newark, NJ 07102
axis design group international, llc.

AAMER ISLAM   PE GE4537200

Heritage Architecture, LLC
Architecture Design Interiors
352 Evelyn St., Suite 2
Paramus, N.J. 07652
Tel : (201) 262 3800
Fax : (201) 262 3802

Project No: 10053
Date: June. 24, 2010
Drawn By:
Checked By:
Scale: As Noted
Lot: **
Block: **

Project: HOUSE OF WORSHIP (MOSQUE) TWO STORY ADDITION
320 Fabry Terrace
Teaneck, NEW JERSEY 07666

Client: DAR - UL ISLAH

Drawing title: TYPICAL DETAILS I

Seal:
Aamer Islam, PE
NJ Lic. # GE 4537200

Drawing No: S-5

© Heritage Architecture, LLC